m-stone installation instructions

BUSHBOARD

Pewter Stone worksurface and upstand.
Shown with a Franke Largo LAX 120 45 30 sink and drainer grooves and a Grohe Minta tap in Supersteel

Ivory Stone worksurface,
upstand and splashback

The beauty of quartz

M-Stone is a unique quartz worksurface material combining luxurious looks, excellent performance and affordability. It's completely different to any other quartz worksurface around because it offers fast and easy installation in the home.

Precision manufactured to the highest standard, this man-made stone features a patented blend of quartz and resin which means it can be cut, routered and shaped on site. There's no templating, waiting or fuss, just a beautiful result every time.

V-groove joints, upstands, splashbacks, curves, inset, undermount and Belfast sinks can all be achieved on site with M-Stone. And the material is backed by a 10 year guarantee, giving the assurance of long-lasting style.

While you may be familiar with other quartz products, M-Stone is not the same so please take time to read our installation instructions. Our website also includes a series of short video clips showing most processes with voice over explanations; visit www.bushboard.co.uk. Please take note of the necessary tooling required for cutting, extraction and polishing, together with our recommendations for using our BBComplete adhesive and sealant. We have developed everything needed for a first-class, professional installation.

Please feel free to call us if you need any advice on 01933 232 272, our Customer Service Team is always happy to help. We also provide free training days at our Training Centre in Wellingborough to encourage best practice and expand skills and knowledge in the trade.

We hope you enjoy working with M-Stone.

Call 01933 232 272 to book onto one of our installer courses

before you start

When working with M-Stone always use relevant personal protection equipment.

Storage and handling

M-Stone worksurfaces must be stored at above 10°C in a ventilated, dry, enclosed area.

Store M-Stone worksurfaces in their original packaging face up supported by timber battens on a flat surface. Place battens 100mm in from each end and at every 900mm.

During installation you may also rest M-Stone on its long edge for short periods at an angle of no more than 20° from vertical; ensure the edge is protected from damage. Do not stand M-Stone on its end leaning against a wall vertically.

M-Stone is heavy. Before handling carefully consider the weight and allocate adequate manpower with correct PPE. Carry each item with short edge vertically and the long edge parallel to the ground. Do not carry flat! Take special care carrying upstands.

During manual handling take care when letting go of M-Stone, sudden jolts or impacts may result in cracking.

Take special care to protect the surface during installation. Use the card packing boxes to form protective covers. Take care not to allow tools to lie on an unprotected surface and protect it well from other trades accessing the installation, especially during tiling.

Conditioning

Prior to commencing installation ensure all materials are brought up to room temperature of around 18°C (64.4°F). This is especially important in the winter and in hot summer conditions. Materials should be correctly stored overnight in the final room to condition them before installation.

Colour compatibility

M-Stone is a blend of natural quartz and resins and as such colour can vary between components. The finish out of the box is the final finish; therefore, the installer can easily check colour compatibility prior to cutting, machining or installation.

Claims for colour variance cannot be made after materials are cut or installed. In the event of an unacceptable variance in colour please contact us and we will arrange replacement of all components. Materials will only be accepted for replacement in perfect condition in their original packaging.

Health and safety

M-Stone is not considered hazardous as supplied, however unlike many other quartz based materials it can be cut and routered using both dry and wet methods.

Operations such as sawing, routering, drilling and sanding will generate dust which contains respirable crystalline silica.

Therefore the installation guidance detailed in this manual and appropriate health and safety precautions must be taken to reduce exposure.

Personal protective equipment

Respiratory Protection: Face mask- Use type FFP3 respiratory protective face mask as a minimum requirement, face fitted in accordance with Health and Safety Executive guidance HSG53 (free download on HSE website)

Eye/Face Protection: Impact resistance safety goggles.

Protective Clothing: Safety foot wear, disposable paper overalls.

Work environment

Work in a sheltered open area with good ventilation that can be easily cleaned.

Do not fabricate in an enclosed space or where the local area can be contaminated with dust.

Dry cutting

Routering processes, circular saw cuts, edge bevel trimming, jigsaw and drilling operations can be carried out by dry methods using machines fitted with purpose designed extraction units.

Extraction units must be maintained and used in accordance with the manufacturer's instructions and the filters changed at the appropriate intervals.

Do not proceed without adequate dust extraction

Wet cutting

Routering processes, circular saw cuts, edge bevel trimming, jigsaw and drilling operations can be carried out by wet methods using suitable machines fitted with water mist dust suppression.

Dust removal

Dust generated during the dry cutting process must be removed only by vacuum extraction methods and placed in sealed bags for disposal.

Sludge from the wet cutting process and washing residues must be removed to lidded containers for disposal. It must not be allowed to dry out.

Other

Take adequate care when using flammable materials, for example the edge polishing compound.

Design considerations

Weight considerations

M-Stone is heavy being similar to granite products. Ensure that your design and furniture layout can support the weight. Void walls must always be battened; especially in 135° diagonal corner solutions.

Maximum unsupported span for M-Stone is 1000mm. Walls should be battened over the span for support.

Cut-outs

Positioning of cut-outs in relation to the end of a worktop: always allow 150mm of clear material between a cut-out and the end of a worktop.

We recommend that joints do not extend through cut-outs for strength reasons.

Belfast & butler sinks: M-Stone is ideal for drainer areas around Belfast or butler sinks. Always allow at least 130mm of material depth behind the sink.

Undermount sink spacing: always allow at least 70mm of clear surface material between two separate undermount sinks.

Heat sources

There are no design restrictions regarding proximity of M-Stone to free standing

cookers or range cookers. However a gap of 8mm should be allowed against heat retaining appliances such as Agas.

Splashbacks are acceptable behind each appliance type, however 130mm should be allowed from any heat source.

Splashbacks and upstands behind gas hobs: always follow hob manufacturer's guidelines and use a registered suitably qualified installer. Allow 130mm clearance from the heat source.

Final sizing against walls

An expansion gap of 3-4mm should be allowed at all wall to worktop junctures.

Product data

Worktops
3050 x 650 x 20mm Surface and all four edges factory finished and bevelled.

Weight – 95kg nominal - carton boxed with crush zones.

1500 x 650 x 20mm Surface with two long and one short edges factory finished and bevelled.

Weight – 48kg nominal - carton boxed with crush zones.

Breakfast bars
2100 x 900 x 20mm Surface and all four edges factory finished and bevelled.

Weight – 91kg nominal - carton boxed with crush zones.

Hob splashback panels
1000 x 1400 x 12mm Surface and two long and one short edge factory finished and bevelled. The remaining edge is square cut to seat against the worksurface.

Weight – 42kg nominal - carton boxed with crush zones.

Upstands
3050 x 100 x 12mm Surface and one long and two short edges factory finished and bevelled. The remaining edge is square cut to seat against the worksurface.

Weight – 12kg nominal - carton boxed with crush zones.

Finishing
M-Stone is supplied fully factory finished. Whilst the edges can be refinished using the specially designed tooling kits provided, the surface CANNOT be refinished.

Standard installation kit : use for all installations.
Use on all kitchen designs with no curved corners or undermount, Belfast or butler sinks.

Contains:

- Diamond edge finishing pad in 120 and 400 grits with velcro
- Radiussed diamond drainer groove and edge finishing pads in 220 and 400 grits
- Radiussed diamond drainer groove and edge finishing pads in 800, 1500 and 3000 grits
- 8mm drill bit
- 12mm drill bit
- Edge bevel cutter to suit trimmer or router
- 2x diamond jigsaw blades
- Heat reflective hob tape
- Edge polish and wipes

Advanced router installation kit: additional to the standard installation Kit.
Enhances the standard kit to complete undermount sinks, Belfast or butler sinks, drainer grooves and curved edges

Contains:

- Special M-Stone diamond router cutters coarse and fine
- Drainer groove cutter (1/2" radius)
- 34mm tap-hole drill bit

Undermount sink cut-out jigs
Use special M-Stone sink jigs.
Do NOT use Encore sink jigs for M-Stone.

Undermount sink clips

Pack contains eight specially designed sink clips, sufficient for one sink.

Adhesive: Use 290ml BBComplete colour matched adhesive & sealant
Sealing joints, seaming, bonding upstands and splashbacks and bonding undermount sinks. No special applicator gun necessary – the cartridge fits a standard mastic gun.

Consumer care kit
Contains special day to day cleaning materials.

Almond Stone worksurface.
Shown with an Omega HiGloss laminate splashback in Ambre.

essential installation tools & materials

The use of the correct tooling will ensure a superior, professional finish.

M-Stone is a very hard material and Bushboard has developed a special range of cutters to work with this tough quartz material. Use only M-Stone cutters, bits and blades to cut our materials. Our cutters work in a different way to standard wood-working tooling.

Standard tungsten carbide saw blades and fluted router cutters will NOT cut M-Stone.

Our processes are simple, but are generally slower than woodworking tooling and require patience. The phrase “take your time and allow the blade to do its work” perfectly describes working with M-Stone. Forcing the machine to cut is both counter-productive and tiring, whilst running a router at higher rotational speeds simply shortens the life of the cutter. Follow our guidance and you will achieve excellent results.

M-Stone cutters can be used both dry with vacuum extraction and within a wet process. When taking the wet route the installer must use appropriate machines, power supplies, jigs and health & safety guidelines. The instructions contained within this guide all follow a dry process with mandatory appropriate vacuum dust extraction.

Recommended power tools

From a safety point of view we recommend 110v power tools.

All power tools listed below can be used dry, however use of the appropriate vacuum extraction is mandatory at all times as is the use of appropriate PPE.

Hand held routers

Primary recommended router: Festool OF 1400 EQ-Plus, 1400w power rating, optimum rotational speed 10,000rpm, setting 1, fitted with appropriate dust extraction.

Secondary recommended routers: Dewalt, Bosch and Makita routers, 2000w power rating, optimum rotational speed 8,000/10,000rpm, fitted with appropriate integrated dust extraction.

Circular plunge-cut saw

Primary, recommended plunge circular saw: Festool TS55EQ Plus & guide rail. 1200w power rating, optimum recommended rotational speed 3500rpm, setting 3.5, fitted with appropriate integrated dust extraction.

Secondary, recommended plunge circular saws: Bosch GKT55 GCE 1400w or Dewalt DWS520K 1300w or Makita SP6000K1 1300w. Optimum rotational speed 3500rpm.

Circular saw blade

As blades can last for several kitchens they are not included in the installation kit. Blade type: semi continuous rim, turbo diamond blade. Diameter 150mm, bore 20mm (may require bore reducer ring) With careful use of our guidelines one blade should cut up to 15-20 metres of 20mm M-Stone

Jigsaw

Primary recommended jigsaw: Bosch 135 BCE Professional

Set-up: pendulum set to ‘0’ and stroke rate at around 1800spm - setting 4

Secondary recommended jigsaw: Festool Carvex PS400 EBQ-Plus

Set-up: pendulum set to ‘0’ and stroke rate at 1800spm - setting 2

Jigsaw blade

Two diamond jigsaw blades are supplied in the standard installation kit. With careful use of our guidelines one blade will cut up to 2-3 metres of M-Stone. However cutting by jigsaw is a far slower process than cutting standard HPL worksurfaces.

However we highly recommend using a plunge-cut saw for this type of process.

Additional packs of blades can be purchased by calling Bushboard on 01933 232 272.

Electric drill

Any good quality power or 18v or 24v cordless drill can be used.

Manually extract dust while cutting. Never use the hammer setting with M-Stone.

Laminate trimmer

Used to form bevelled edge profile.

Recommended trimmer: Makita RTO700C variable speed trimmer with bottom adjustable guide roller. Optimum recommended rotational speed 12,000rpm, setting 2. Always use manual hand held dust extraction.

Edge profile cutter

An edge bevelling cutter is supplied in the standard installation kit. With careful use to our guidelines one cutter will cut up to 10-15 metres of M-Stone. Additional cutters can be purchased by calling Bushboard on 01933 232 272.

Vacuum dust extractor

Recommended vacuum extractor: Festool Cleantex CTM range. For MAC values >0.1mg/m2.

Simple water spray bottle

Used to dampen hand sanding pads. Fill with pure water.

cutting, edging and jointing M-Stone

M-Stone is a hardwearing surface and as such the correct use of good quality power tools and the correct sharp cutters will produce a professional finish.

Cutting 20mm and 12mm M-Stone to length and depth

M-Stone can be customised using a circular saw fitted with the recommended diamond blade and mandatory vacuum dust extraction. For example: cutting the standard worktop down from 650mm to 600mm, cutting an end square to form the standard M-Stone butt joint or customising splashbacks and upstands. A saw cut edge needs no refinishing and is acceptable as a finished rear or hidden edge.

When further customisation is necessary, for example cut-outs and curved ends, we recommend you consider cutting to final size once this customisation is complete.

It is vital that M-Stone is well supported during fabrication operations

M-Stone is heavy. During all machining operations ensure the work-piece and offcut are fully supported to eliminate damage should an offcut fall away. Work on a full length base board supported as follows (see figure A):

- Two trestles for lengths 1000mm and under
- Three trestles for lengths up to 1700mm
- Four trestles for length up to 3050mm

The diamond circular saw blade will not cut timber. Therefore it is vital that the work-piece and offcut are supported above the base board during machine operations; use 40+mm tall planed timber bearers or blocks (see figure B).

Timber spacing blocks should be evenly spaced in order to fully support the work-pieces and offcut to prevent the waste section falling away and damaging the material (see figure C).

Straight cuts with a circular saw

Work with the worktop face up, mark the cut line in pencil and position and secure the plunge-cut saw guide rail. When cutting M-Stone to final size, allow a 3-4mm expansion gap to the rear and at each end against a wall.

Set the blade depth to cut to the M-Stone thickness plus 2mm and using a vacuum extractor make the cut in a single pass whilst smoothly applying minimal but even pressure; do not force the blade.

Customised cuts with a jigsaw

On occasion it will be necessary to remove sections of surface to scribe around nibs, soil stacks or pipe boxes. In this instance a jigsaw fitted with the diamond blade supplied in the standard installation kit is the ideal tool. Dust extraction is vital and should be controlled using a vacuum extractor manually.

Mark out the cut-out final size in pencil. Using the diamond drill bit from the standard installation kit drill 8mm holes within the marked out line at each of the corners. To avoid drill bit slide damage, we recommend attaching duct or vinyl tape to the surface prior to commencing drilling.

Set the pendulum setting on the jigsaw to '0' and the stroke rate to 1800spm. The key to jigsaw cutting M-Stone is patience: do not push the machine too hard, give the blade time to cut. Forcing the blade and pace will lead to blade deflection and an out of square cut.

To avoid the base plate damaging the face surface, always use the plastic surface protective shoe that comes with the machine or apply 50mm masking tape to the M-Stone surface.

Converting a cut edge to a finished bevelled edge

To produce a polished and bevelled edge two processes are required:

First reproduce the bevelled edge:
M-Stone includes factory prefinished edges with a bevel top and bottom.

Recreating this bevel is simple using a laminate trimmer fitted with an adjustable guide assembly and the M-Stone diamond bevel cutter from the standard installation kit. The trimmer should run at the recommended rotational speed of 12,000rpm.

To set the trimmer to cut the bevel accurately we strongly recommend carrying out set up trials on waste material. Accurate set up is vital where a radius end has been cut and the new bevelled edge meets the factory edge.

Apply 50mm wide masking tape to the face to prevent the base plate damaging the surface.

The bevel trim should be carried out in one smooth pass. Ideally use a trimmer with an extractor attachment; however it is mandatory to manually vacuum extract during the process.

Second finish the edge face:
This final edge process is necessary where an edge is visible; it is however unnecessary if the edge forms a joint.

Following bevelling, the front face of the worktop will need to be polished. The process is designed to be undertaken by hand and the installation kit includes a set of diamond hand sanding pads. The velcro backed pads can be attached to a hand-held palm sander to speed up the finishing process. Set to setting 1, never run at high speed.

When using sanding pads ensure both the M-Stone edge and the sanding pad are kept moist; use a hand held spray bottle filled with pure water.

Dampen both the surface and the pad and start sanding using the 220 grit pad initially applying straight strokes followed by a circular action. Next use the 400 grit pad following the same process. If a higher finish is desired then follow the same procedures by hand with 800, 1500 and 3000 grit resin pads. Resin pads should not be used on a palm sander. The aim is to achieve a smooth finish to the touch. Slight bumps or irregularities

can be removed using the coarse pad first. Do not sand the factory finished surface with the diamond sanding pads. It is not essential to sand the bevel; in fact we recommend that the bevel is not sanded to protect the face from damage. When sanding radius ends, the new edge will need to be carefully blended in to the factory finished edge to achieve an unobtrusive finish. Generally darker colours require more care and effort compared to lighter colours.

Wash the edge clean and allow to dry. Whilst the sanding process works well for lighter decors, darker decors may dry to a lighter shade than the factory finished edge; this is normal. The standard installation kit includes a bottle of edge polish to produce the final lasting finish on darker decors. Using a clean wipe from the kit accurately apply up to two coats of the edge polish to the edge only in a single pass. Allow to dry for fifteen minutes between coats. Do not apply this polish to the face. Allow the finished edge to cure for 24hrs before final finish and general use. When applying polish to radius ends it may be necessary to extend the edge polish to the factory finished edge to achieve a good blend.

Joints in M-Stone

Forming joints in M-Stone is very simple. In common with natural stone, joints are formed by simply butting two worktops together. The long bevelled front edge of one worktop is abutted by the short bevelled edge of another. The resulting joint is a neat v-groove. The joint is sealed against moisture penetration using BBComplete colour matched adhesive and sealant.

Ensure any joining edges have a bevel formed on the top and bottom faces. Any saw cut edges will not need any additional finishing, simply follow the process above to produce the bevel in readiness for jointing (see pages 20 and 21 for further details).

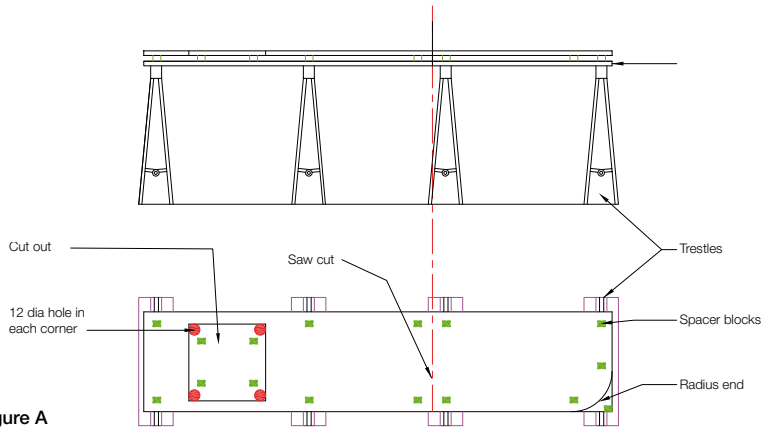

figure A

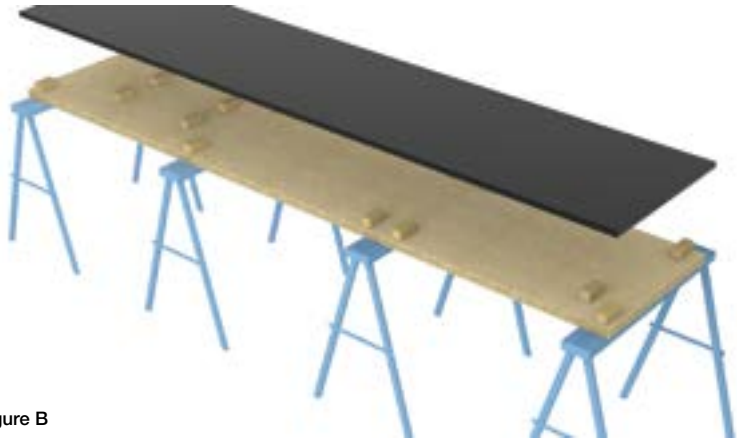

figure B

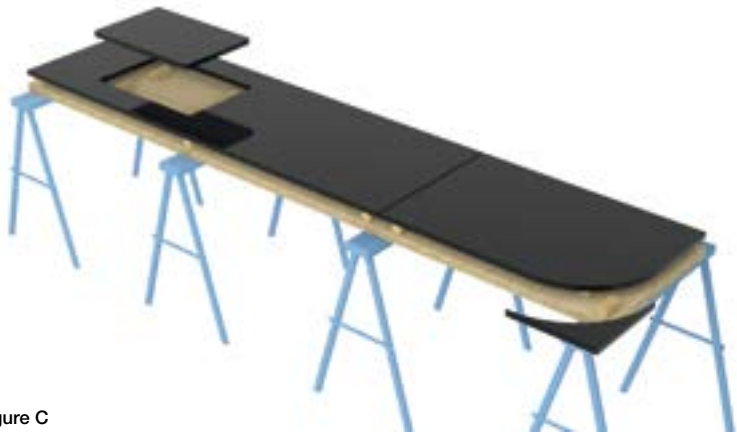

figure C

cut-outs for standard inset sinks and hobs

Cut-outs for both inset sinks and hobs are possible using three methods. We strongly recommend using a plunge-cut circular saw as the simpler of the two.

Cut-outs for both inset sinks and hobs are possible using two methods. We strongly recommend using a plunge-cut circular saw as the simpler of the two.

Best results are produced using a Festool plunge-cut saw and associated guide rail fitted with mandatory extraction.

In all instances when making a cut-out carefully follow the diagrams on page 9 and work on a correctly supported base board ensuring the work piece and waste is fully supported above the base board on 40+mm tall planed timber bearers or blocks. Support the cut-out waste section on similar blocks to ensure it remains supported and cannot fall away.

Cutting a standard cut-out using a plunge-cut saw

Mark out the cut-out final size in pencil.

Using the diamond drill bit from the standard installation kit, drill 12mm holes within the marked out line at each of the four corners. For hobs requiring nearly square corners use 8mm drill bit, for inset sink use 12mm or 34mm depending on under flange of the sink at corners. 12mm holes should be drilled in incremental stages using 8mm then 12mm drill bit. Secure the guide rail and set the blade depth to 22mm.

Carefully plunge the saw into the surface cutting from corner to corner taking care to leave 50mm to each radius at the corner intact; do not cut corners square. The final cut to complete the cut into the drilled hole is made by jigsaw.

Repeat and finish the three remaining cuts, perhaps waiting until immediately prior to installation.

Using a jigsaw fitted with special M-Stone diamond jigsaw blade complete each cut into the drilled hole ensuring the radius corner is left intact.

Remove the offcut and thoroughly remove dust using a vacuum.

Cutting a standard cut-out using a jigsaw

M-Stone can be cut using a jigsaw and special diamond jigsaw blade. Cutting by jigsaw takes much more time and dust control is more difficult. We however recommend that installers without plunge-cut saws consider investing in this excellent type of power tool. We therefore recommend that jigsaws are only used for short length cuts.

Using a jigsaw to form a full sink cut-out is possible and will use two or more M-Stone jigsaw blades. Dust extraction is vital and should be manually controlled using a vacuum extractor.

Using the 12mm diamond drill bit from the standard installation kit, drill holes within the marked out cut out. You must complete each cut at a 12mm drill hole.

Set the pendulum setting to ‘0’ and the Stroke rate to 1800spm. The key to jigsaw cutting M-Stone is patience: do not push the machine too hard, give the blade time to cut. Forcing the blade and pace will lead to blade defection and an out of square cut. To avoid the base plate damaging the face surface, always use the plastic surface protective shoe that comes with the machine or apply 50mm masking tape strips to the M-Stone face.

Bevelling cut-out edges

All cut-out upper and lower edges need to be bevelled in the same manner as the front edge of the worksurface. Follow the instructions for reforming a bevel after saw cutting on page 8. Finally apply heat reflective tape.

Important: Once a cut-out has been made in a worktop it is vital that care is taken to protect the surface from flexing and therefore cracking or breaking. Consider using clamps and a cover board to add rigidity or leaving corner sections of the cut-out intact as a blind cut-out for removal later.

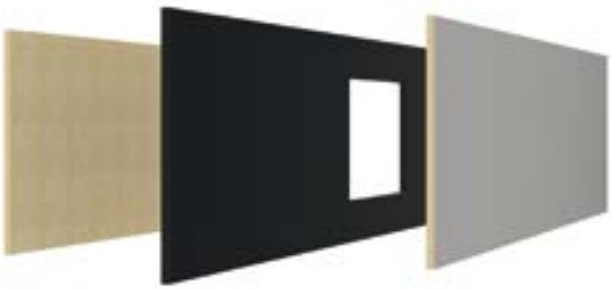

Illustrations above and below show the correct way to support a cut-out

cut-outs for flush-fit sinks

Flush-fit sink installation

A cut out for a flush-fit sink is formed in two stages; first routering the flush-fit rebate and next forming the cut out.

The final cut out for flush-fit sink is possible using two methods: using a plunge-cut circular saw or a jig-saw. We strongly recommend using a plunge-cut circular saw as the simplest.

Best results are produced using a Festool router and plunge-cut saw fitted with mandatory extraction.

In all instances when making a cut out carefully follow the diagram on page 9 and work on a correctly trestled base board ensuring the work piece and waste is fully supported above the base board on 40+mm tall planed timber bearers or blocks. Support the cut-out waste section on similar blocks to ensure it remains supported and cannot fall away.

Important: Once a cut out has been made in a worktop it is vital that care is taken to protect the surface from flexing and therefore cracking or breaking. Consider using clamps and a cover board to add rigidity or leaving the final corner sections of the cut out intact for removal later once in situ. Do not carry flat always carry a worktop on it's edge.

Flush-fit rebates should be formed using a proven jig. If making your own jig allow for a 10mm router cutter and a 30mm guide bush. The top of the external edge of the flush-fit rebate will be visible so care must be taken whilst cutting.

Stage one: Forming the flush-fit rebate:

Working with the worktop face up, position the jig, centralise and clamp using G Clamps. Insert the balancer.

Fit a 10mm coarse diamond cutter and 30mm guide bush to the router. Place the router on the jig and with the router unplugged and off plunge down until the cutter touches the surface. Lock the router off and zero the depth gauge. Ensure adequate extraction is fitted to the router.

Set the router to the required depth to suit your sink and lock the depth gauge. Set the router rotational speed dial to 1 (Festool 8,000 or Dewalt 10,000 RPM).

The flush fit rebate can be cut to exact depth or cut marginally deeper and packed up using appropriate spacers directly above sink clips. Starting from one corner gently plunge down to the required depth and start routering at a slow steady pace; allowing the router cutter to cut. Routering around the entire cut out at least twice will ensure a consistent depth. Remove the balancer and thoroughly clear any dust or debris using extraction. Carefully check the depth before removing the jig.

Stage two: Forming the cut out

The cut out is formed in line with the inside line of the 10mm rebate ensuring that once the cut out is formed the 10mm wide rebate is intact.

Drill x4 holes to the internal corner of the cut out. If using 12mm holes drill first with the 8mm bit before completing with the12mm drill bit.

We recommend drilling large diameter holes to the four internal corners of the cut out; where possible use the 34mm drill bit.

To avoid drill bit slide damage attach a piece of Duct or good quality vinyl tape to the surface to be drilled.

Secure the saw guide rail and set the blade depth to 22mm.

Carefully plunge the saw into the surface cutting from corner drilled hole to corner drilled hole taking care to leave the final 50mm to the radius intact; do not cut corners square.

Repeat and finish the three remaining cuts.

The final cut to complete the cut-out into the drilled hole is made by jig-saw. Using a jig-saw fitted with special m-stone diamond jig-saw blade complete each cut into the drilled hole ensuring the radius corner is left intact.

Remove the offcut and thoroughly remove dust using a vacuum.

Take care when moving the worktop with the new cut out.

Fitting a flush-fit sink:

Ideally the sink installation should be carried out with worktop installed in it's final position.

Thoroughly clean the cut out using clean water. Clean the sink flange using white spirit. Apply a single bead of matching BBComplete adhesive, diameter 4 - 5mm central to the 10mm rebate, insert any necessary spacers at this point then fit the sink and gently push down all round. Check for alignment both at face level and central to the cut out. Adjust if necessary and tighten the sink clips, but do not overtighten.

Remove any excess BBComplete from the face promptly using a soft scraper following up with a soft lint free cloth and white spirit, Allow to cure for 24hrs prior undertaking further plumbing work.

cut-outs for undermount and Belfast sinks

Now you can complete the look with our innovative undermount sink solution. M-Stone is the ideal material to form Belfast or butler sink draining areas from.

Forming cut-outs for undermount sinks

The process for undermounting sinks into M-Stone has been carefully thought out and produces excellent results if followed carefully with the correct equipment and tooling. The final sink cut-out will be of the classical type where the surface overhangs the sink by around 5mm. If undermounting two sinks side by side the minimum acceptable width of M-Stone material between sinks is 70mm.

Bushboard have developed a range of specialist tools including a pair of diamond router cutters to customise M-Stone. It is vital that only these tools are used to assure excellent results.

Undermount sink cut-outs are formed using a hand router and an M-Stone cut-out jig. Dust control is vital; do not proceed without the mandatory vacuum dust extractor and suitable PPE.

Always use the recommended routers as laid out in the tools section set to operate at our recommended rotational speeds. Routering M-Stone is a much slower process than you will have experienced with wood based products; cutting is achieved by grinding rather than cutting. Therefore the effort taken by the operator needs to be consistent and slow to allow the machine to cut at the most efficient pace. Care should be taken to resist exerting excess pressure on the cutter; forcing the pace is counter-productive in terms of time and blade wear and is tiring!

In all instances when making a cut-out carefully follow the diagrams on page 9 working on a correctly trestled base board ensuring the work piece and waste is fully supported on 40mm+ tall timber bearers or blocks. Support the cut-out waste section on similar blocks to ensure it remains supported and cannot fall away.

Undermount cut-out jigs

Best results are possible using M-Stone jigs. However most undermount sinks are supplied with a template. Installers can simply make their own jigs, taking care to allow for a 30mm guide bush offset and a 13mm cutter.

When making a jig ensure the edges are perfectly smooth and square. Any slight undulations will be reflected in the quality of cut which can be difficult to hand finish.

Do not use Encore sink jigs: the final cut-out size will be larger than necessary.

Sink cut-out jigs supplied for M-Stone are based on a standard 30mm guide bush and a 13mm diameter cutter.

To eliminate router tilt and un-square edges, M-Stone jigs are supplied with a balancing packer to support the innermost side of the router base. Should you choose to make your own jig we highly recommend using the inner cut-out as a similar packer.

Making an undermount sink cut-out

The process works in two stages:

Stage one: forms the basic cut-out using the coarse 10mm diameter cutter.

Stage two: completes the cut-out in readiness for final finishing using the 13mm fine cutter.

In all instances when making a cut-out carefully follow the diagram on page 9. Equal height timber blocks should be sensibly positioned to ensure the worktop and off-cut is fully supported. Ensure that the router cutter does not contact the base board.

Stage one: forming the basic cut-out

Set up the router: use the 10mm diameter coarse cutter - the optimum rotation speed for the coarse cutter is 10,000rpm on setting 1 for Festool routers or 8,000rpm, setting 1 for Dewalt routers. Use of vacuum dust extraction is mandatory.

The initial coarse cut must be cut in three depth cut stages:

5mm 1st pass, cutter depth set to 5mm
5mm 2nd pass, cutter depth set to 10mm
10mm 3rd pass, cutter depth set to 25mm

To reduce friction between the jig and the router base apply a light film of petroleum jelly.

Set the cutter depth stop to 5mm and plunge to enter the material, some resistance may be felt at the initial start point, after this the machine will flow at a steady pace.

Finish the cut and repeat for the next two depth stop settings. Between each stage use the extractor hose to remove all dust from the newly cut groove and surrounding area. For the final 3rd cut set the router cutter depth stop to 25mm.

Important: During the final third cut temporarily place a timber block directly under the plunge point, this will help avoid talking a chunk out of the underside. Gently plunge to full depth, stop, retract the cutter and remove the timber block before finishing the final fourth cut.

Do not remove the jig. Before moving to the next stage remove the offcut, balancer and spacer blocks and thoroughly clean away all dust using a vacuum cleaner. Then reinsert the spacer blocks, offcut, balancing packer ensuring the offcut is perfectly central and only then move to stage two.

Stage two: completing the final cut-out to a fine finish

Reset the router: use the fine cutter - the optimum rotational speed during the fine cutter is 11,000rpm for Festool routers and 9,000rpm for Dewalt routers. Use of vacuum dust extraction is mandatory.

The final fine cut removes around 2mm of material from the edge and the offcut, cutting into the edge and the offcut provides a balanced cut; however it must be made in a single full depth cut.

The cutter depth stop should be set to ensure that the cutter protrudes by around 10mm below the bottom face.

Starting from a corner, start the router and gently plunge the cutter ensuring it is not in contact with the face to be cut. Gently push the machine in towards the face and forward at a slow steady pace. Never stop at any point with the router running;

always pull away from the edge before stopping: a decelerating cutter will leave a friction mark in the face which is difficult to remove.

Never reverse the router to recut an area, doing so can leave difficult to remove marks. If you need to recut an area make another complete pass around the jig.

Check the quality of the cut face after completing the cut-out. If necessary re-router the full cut-out to produce the most accurate finish; making two or three additional full depth passes will assure accuracy and reduce finishing time later.

Remove the jig only when you are happy with the quality of the cut face. Remove the balancing packer, off-cut and spacer blocks and thoroughly remove all dust using a vacuum cleaner.

Forming cut-outs for Belfast and butler sinks

Following the instructions from the sink manufacturer make a jig to suit the sink in 10 -12mm thick material allowing for a 30mm guide-bush and a 13mm fine cutter. We suggest making a balancing packer from the inner offcut to prevent router tilt. The jig edges should be cleanly cut and free from blade marks; any imperfections will be transferred to the final cut faces making edge finishing difficult.

We recommend an overhang of 5-7mm in past the inner face of the sink. The minimum allowable depth for the rear worksurface behind the sink is 130mm.

In all instances when making a cut-out carefully follow the diagrams on page 9 working on a correctly supported base board ensuring the work piece and waste is fully supported on 40mm+ tall timber bearers or blocks. Support the cut-out waste section on similar blocks to ensure it remains supported and cannot fall away.

The process works in two stages:

Stage one: forms the basic cut-out using the coarse 10mm diameter cutter.

Stage two: completes the cut-out in readiness for final finishing using the 13mm fine cutter.

Stage one: forming the basic cut-out

Position and clamp the jig in place with four g-clamps, then insert the balancer.

Set up the router: use the 10mm diameter coarse cutter - the optimum rotational speed for the coarse cutter is 10,000rpm on setting 1 for Festool routers or 8,000rpm, setting 1 for Dewalt routers. Use of vacuum dust extraction is mandatory.

The initial coarse cut must be cut in three depth cut stages:

5mm 1st pass, cutter depth set to 5mm
5mm 2nd pass, cutter depth set to 10mm
10mm 3rd pass, cutter depth set to 25mm

To reduce friction between the jig and the router base apply a light film of petroleum jelly.

Set the cutter depth stop to 5mm. To prevent break out of the front edge during the exit phase of the cut start by cutting into the right hand exit point first by around 5mm before commencing the full cut from the left hand entry point. Whilst this is against the router rotation, it will reduce any problems of break-out later. Finish the cut around the jig in the usual clockwise manner and repeat the cuts from both entry and exit points as before for the next two depth stop settings. Between each stage use the extractor hose to remove all dust from the newly cut groove and surrounding area.

Do not remove the jig. Before moving to the next stage remove the offcut, balancer and spacer blocks and thoroughly clean away all dust using a vacuum cleaner. Then reinsert the spacer blocks, offcut, balancing packer ensuring the offcut is perfectly central and only then move to stage two.

Stage two: completing the final cut-out to a fine finish

Reset the router: use the fine cutter - the optimum rotational speed during the fine cutter is 11,000rpm for Festool routers and 9,000rpm for Dewalt routers. Use of vacuum dust extraction is mandatory.

The final fine cut removes around 2mm of material both from the edge and offcut, cutting into both edge and offcut provides a balanced cut: however it must be made in a single full depth cut.

The cutter depth stop should be set to ensure that the cutter protrudes by around 5mm below the bottom face.

To prevent break out of the front edge during the exit phase of the cut start by cutting into the right hand exit point first by around 5mm before commencing the full cut from the left hand entry point. Whilst this is against the router rotation, it will reduce any problems of break-out later. Finish the cut around the jig in the usual clockwise manner. Use the extractor hose to remove all dust from the newly cut groove and surrounding area.

Never stop at any point with the router running; always pull away from the edge before stopping: a decelerating cutter will leave a friction mark in the face which is difficult to remove.

Never reverse the router to recut an area, doing so can leave difficult to remove marks. If you need to recut an area make another complete pass around the jig.

Check the quality of the cut face after completing the cut-out. If necessary re-router the full cut-out to produce the most accurate finish; making two or three additional full depth passes will assure accuracy and reduce finishing time later.

Remove the jig only when you are happy with the quality of the cut face. Remove the balancing packer, off-cut and spacer blocks and thoroughly remove all dust using a vacuum cleaner.

Important: Once a cut-out has been made in a worktop it is vitally important that care is taken to protect the surface from flexing and therefore cracking or breaking. Consider using clamps and a cover board to add rigidity. This is especially true of Belfast and butler cut-outs. Consider leaving tap holes until immediately prior to the worksurface being fixed in place; adding these large holes will further weaken the surface. (see page 10)

Black Diamond Stone worksurface
with Carron Phoenix Belfast 200 sink
and drainer grooves and a Grohe Bridgford tap.

finishing undermount & Belfast sink cut-outs and drainer grooves

Finishing cut-out inside edges

To finish the inner edge of a sink cut-out to a polished and bevelled edge two processes are required:

First reproduce the bevelled edge:

The front bevelled edge must be reproduced in a sink cut-out at both top and bottom.

Recreating this bevel is simple using a laminate trimmer fitted with an adjustable guide assembly and the M-Stone diamond bevel cutter from the standard installation kit. The trimmer should run at the recommended rotational speed of 12,000rpm.

To set the trimmer to cut the bevel accurately we strongly recommend carrying out set up trials on waste material. Accurate set up is vital where a Belfast or butler cut-out has been cut and the new bevelled edge meets the factory edge.

Apply 50mm wide masking tape to the face to prevent the base plate damaging the surface.

The bevel trim should be carried out in one smooth pass. Ideally use a trimmer with an extractor attachment; however it is mandatory to vacuum extract during the process.

Following bevelling, the inner face of the cut out will need to be polished. The process is designed to be undertaken by hand and the installation kit includes a set of diamond hand sanding pads. The Velcro backed pads can be attached to a small hand-held palm sander to speed up the finishing process in easily accessible straight sections. The Palm sander should be set to setting 1, never run at full high speed. However the inner corners will need sanding by hand.

When using sanding pads ensure both the M-Stone edge and the sanding pad are kept moist; use a hand held spray bottle with pure water.

Dampen both the surface and the pad and start sanding using the 220 grit pad initially applying straight strokes followed by a circular action. Next use the 400 grit pad following the same process.

If higher level finish is desired then also use 800, 1500 and 3000 grit resin sanding pads. Resin sanding pads are not designed to be used with Palm sander. Slight bumps and irregularities can be removed by using 120 grit coarse pad first. To finish internal tight corners use the round edge of drainer groove sanding pad.

When sanding the inner corners it may be necessary to peel off the velcro backer from the diamond sanding pads to improve flexibility for accessibility.

The aim is to achieve a smooth finish to the touch. Do not sand the factory finished surface with the diamond sanding pads.

Wash the edge clean and allow to dry. Whilst the sanding process works well for lighter decors, darker decors may dry to a lighter shade than the factory finished edge; this is normal. The standard installation kit includes a bottle of edge polish to produce the final lasting finish on darker decors. Using a clean wipe from the kit accurately apply two light coats of the edge polish in a single even pass only and allow to dry for fifteen minutes between coats. Do not apply this polish to the face. Allow the finished edge to cure for 24hrs before general use. When applying polish to a radius end it may be necessary to extend the edge polish to the factory finished edge to achieve a good blend.

Forming drainer grooves

M-Stone allows the flexibility to design your own drainer groove layouts.

Drainer grooves can be cut using a drainer grooving jig and the special diamond cutter included in the advanced installation kit. We highly recommend using the thicker 12mm M-Stone version to prevent dust build up damaging the M-Stone face.

The maximum recommended groove depth is 3mm. Set the router rotational speed to 10,000 rpm and use mandatory vacuum dust extraction.

Measure and mark pencil lines to suit your drainer design. Centralise and clamp the drainer groove jig in place with g-clamps.

To set the router depth: with power off, place the router on the jig and gently plunge until the cutter contacts the worksurface, lock and zero the depth gauge. Remove the router and set the depth gauge to 3mm and lock. Lubricate the router base and the jig with petroleum jelly for a smooth transit across the jig.

Place the router in position at the sink cut-out end of the jig. Gently plunge and keeping to the left of the jig slot smoothly push the router forward at a slow and steady pace until it reaches the fixed end of the jig, gently push to the right and smoothly return to the cut-out end keeping to the right. Repeat twice or more for each drainer groove to ensure an evenly cut groove requiring less finishing.

Reposition the jig and repeat for the full set of grooves.

Forcing the router along the jig will result in router rise causing uneven depth grooves and difficulty in producing an acceptable finish.

Never form square bottomed drainer grooves.

Finishing drainer grooves

The standard installation kit includes shaped sanding pads in both 220 and 400 grits. The radiussed pad is designed to fit into a previously cut drainer groove.

Prior to finishing, drainer grooves need to be soaked using water mixed with 30% liquid soap for around fifteen minutes.

During hand sanding keep the drainer groove and the radiussed sanding pad moist by spraying with pure water.

Using the 220 grit pad sand the groove using long full length strokes. Wash the grooves clean and next sand using the 400 grit sanding pads until desired finish is achieved. Take special care not to damage the surrounding surface.

Wash the grooves clean and allow to dry. Whilst the sanding process works well for lighter decors, darker decors may dry to a lighter shade than the face; this is normal. The standard installation kit includes a bottle of edge polish to produce the final lasting finish on darker decors. Using a felt bob from the kit accurately apply up to two light coats of the edge polish to the groove only and allow to dry for fifteen minutes between coats. Do not apply this polish to the face. Allow the finished groove to cure for 24hrs before use.

fixing sinks

Fixing sinks and taps

It is a condition of the M-Stone guarantee that undermount sinks are only fitted using both BBComplete adhesive & sealant and M-Stone adjustable fixing clips.

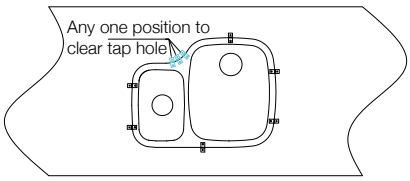

figure A

Refer to the fixing clip drawing: at least four clips must be used for single bowl sinks, at least seven for one and a half bowl sinks and eight for double bowl sinks.

Never fix sink clips at 45º to corners – only fix clips parallel to straight edges.

Heavy sinks such as Belfast, butler and ceramic undermount sinks must be fully supported by the furniture beneath and not the worksurface.

Working face down on a clean base board, place the sink in position and centralise, testing from below. Mark the position of the sink by drawing around the flange with a suitable pencil or marker pen.

Attach the nylon screw to one clip, position the clip so that the nylon screw locates on the flange of the sink, mark through the sink clip fixing hole onto the rear face of the worktop. Repeat and mark all fixing positions and then remove the sink.

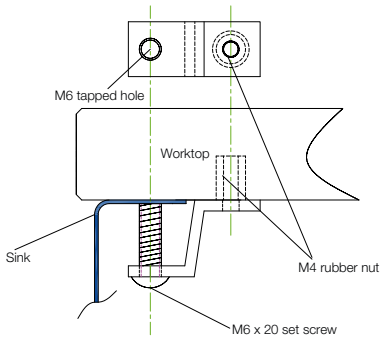

figure B

Attach the depth stop to the 8mm diamond drill bit, set the depth stop to drill 12mm deep holes.

Using a drill and hand held vacuum extraction drill holes at each sink clip mark to 12mm depths.

Thoroughly clean the holes using a vacuum cleaner and clean water and allow to dry.

Insert the special rubber nuts into the predrilled holes, tapping **gently** into place.

Thoroughly clean the mating surfaces of both sink and worksurface using water and then white spirit and allow to dry.

Apply 5mm diameter continuous beads of BBComplete to the flange of the sink as follows:

- Flange width 15mm and under: two beads – one inner one outer
- Flange width over 15mm: three beads – one inner, one central and one outer

Place the sink in position and gently press down.

Place the sink clips in position and secure using a No3 Pozidriv handheld screwdriver. It is important to apply ample downward force to ensure the inner brass fitting locates, however do not overtighten. **Do not** use power screwdrivers.

Centralise the sink and secure by winding down the nylon screws. Carefully turn the worktop over onto trestles taking extra care to prevent flexing and cracks.

Using a soft scraper, smooth the bead of BBComplete. Any excess should be cleaned using a minimum amount of white spirit. Allow to cure for 24hrs before final finish and general use.

Fitting Belfast and butler sinks

The entire weight of the sink must be carried by the furniture and not the worktop. The worktop should rest on the sink.

Ensure the highest point of the sink is at the same level as the furniture. Apply beads of white BBComplete to the top face of the sink prior to lowering the surface in place. Ensure that the sink is well sealed to the surface and spills and overflowing water cannot bypass the seal into the furniture.

Tap holes

M-Stone can be drilled for taps using the special 34mm diamond cutters included in the advanced installation kit.

The coarse diamond grit cutter utilises the 8mm drill bit as the centre point guide drill. Dust should be extracted manually with a vacuum extractor whilst cutting. Ensure the surface is rigidly supported during drilling and temporarily insert a timber block directly under the centre of the drilling area to prevent the rear face splintering.

Take care to consider the weakening effect of 34mm tap-holes in the narrow rear worksurface strip behind a Belfast or butler sink.

Whilst M-Stone is totally waterproof, take extra care to seal the tap in place after installation to protect the furniture below.

Black Diamond Stone
worksurface with drainer grooves.

Black Gem Stone worksurface
and upstand.

forming curved ends

M-Stone is the ideal material to produce curved worktops simply and rapidly on site, with no restrictions in respect to the minimum or maximum curves possible.

When routering a radius end carefully follow the diagram on page 9 working on a correctly trestled base board ensuring the work piece and waste is fully supported above the base board on equal height, 40mm+ tall timber bearers or blocks. Support the cut-out waste section on similar blocks to ensure it remains supported and cannot fall away, use clamps to hold in place. Ensure that the router cutter does not contact the base board.

In common with routering for sink cut-outs the process is completed by two jig based cutting stages and two final finishing stages.

A pair of M-Stone jigs is available from your supplier to cut 200mm, 263mm, 300mm and 450mm radii. You can also make your own jig to match the curved solution your customer requires: don't forget to offset for a 30mm guide bush and a 13mm cutter. Do not use Encore jigs.

Set up the work piece taking account of router rotation. You should aim to always enter the front face of the worktop and exit the rear face to reduce any possibility of splintering on exit. The worktop will either be face up or face down; the waste should always be to the right. Align the jig with the front face of the worktop and clamp in place with g-clamps; next clamp or srew fix the balancer in place.

Stage one: forming the basic shape

Position and clamp the jig in place with g-clamps, Clamp or screw fix the balancer in place allowing clearance for a 30mm guide bush.

Set up the router: use the 10mm diameter coarse cutter - the optimum rotational speed for the coarse cutter is 10,000rpm on setting 1 for Festool routers or 8,000rpm, setting 1 for Dewalt routers. Use of vacuum dust extraction is mandatory.

The initial coarse cut must be cut in three depth cut stages:

5mm 1st pass, cutter depth set to 5mm
5mm 2nd pass, cutter depth set to 10mm
10mm 3rd pass, cutter depth set to 25mm

To reduce friction between the jig and the router base apply a light film of petroleum jelly.

Set the cutter depth stop to 5mm and plunge to enter the material. Some resistance may be felt at the initial start point, after this the machine will flow at a steady pace.

Finish the cut and repeat for the next two depth stop settings. Between each stage use the extractor hose to remove all dust from the newly cut groove and surrounding area.

For the final cut set the router cutter depth stop to 25mm.

Do not remove the jig. Before moving to the next stage remove the offcut, balancer and spacer blocks and thoroughly clean away all dust using a vacuum cleaner. Then reinsert the spacer blocks, offcut, balancing packer and only then move to stage two.

Stage two: completing the final cut-out to a fine finish

Reset the router: use the 12mm fine cutter - the optimum rotational speed during the fine cutter is 11,000rpm for Festool routers and 10,000rpm for Dewalt routers. Use of vacuum dust extraction is mandatory.

The final fine cut removes around 2mm of material; however it must be made in a single full depth cut.

The cutter depth stop should be set to ensure that the cutter protrudes by around 5mm below the bottom face.

Start the router and gently plunge the cutter ensuring it is not in contact with the face to be cut. Gently push the cutter in towards the face and forward at a slow steady pace. Never stop at any point with the router running; always pull away from the edge before stopping: a decelerating cutter will leave a friction mark in the face which is difficult to remove.

Never reverse the router to recut an area, doing so can leave difficult to remove marks. If you need to recut an area make another complete pass around the jig.

Check the quality of the cut face after completing the curve. If necessary re-router the full curve to produce the most accurate finish; making two or three additional full depth passes will assure accuracy and reduce finishing time later.

Remove the jig only when you are happy with the quality of the cut face. Remove the balancing packer, off-cut and spacer blocks and thoroughly remove all dust using vacuum cleaner.

Stage three: reproduce the bevelled edge

M-Stone includes factory prefinished edges with a bevel top and bottom.

Recreating this bevel is simple using a laminate trimmer fitted with an adjustable guide assembly and the M-Stone diamond bevel cutter from the standard installation kit. The trimmer should run at the recommended rotational speed of 12,000rpm.

To set the trimmer to cut the bevel accurately we strongly recommend carrying out set up trials on waste material. Accurate set up is vital where a radius end has been cut and the new bevelled edge meets the factory edge.

Apply 50mm wide masking tape to the face to prevent the base plate damaging the surface.

The bevel trim should be carried out in one smooth pass. Ideally use a trimmer with an extractor attachment; however it will be necessary to manually vacuum extract during the process.

Where the new curved edge meets the factory finished edge it is vital that they meet unobtrusively. We suggest starting to bevel under size initially and working up to the factory bevel size. If you find this difficult you may decide to re-bevel the entire worktop for uniformity; in this instance apply masking tape to the entire face surface first.

Stage four: finish the edge face

Following bevelling, the front face of the worktop will need to be polished. The process is designed to be undertaken by hand and the installation kit includes a set of diamond hand sanding pads. The Velcro backed pads can be attached to a small hand held palm sander to speed up the finishing process. The new edge will need to be carefully blended into the factory finished edge to achieve an unobtrusive finish.

Dampen both the surface and the pad and start sanding using the 220 grit pad initially applying straight strokes followed by a circular action. Next use the 400 grit pad following the same process. The aim is to achieve a smooth finish to the touch. Do not sand the factory finished surface with the diamond sanding pads. If a higher finish is desired then follow the same procedures by hand with 800, 1500 and 3000 grit resin pads.

Wash the edge clean and allow to dry. Whilst the sanding process works well for lighter decors, darker decors may dry to a lighter shade than the factory finished edge; this is normal. The standard installation kit includes a small bottle of edge polish to produce the final long lasting finish on darker decors. Using a clean wipe from the kit accurately apply up to two light coats of the edge polish to the edge only and allow to dry for fifteen minutes between coats. It may be necessary to extend the edge polish to the factory finished edge to achieve a good blend. Do not apply this polish to the face.

Pewter Stone worksurface showing how the corner joint is neatly formed with a v-groove detail.

final installation

Contemporary styling affordably priced.

Assembling joints

Forming joints in M-Stone is very simple. In common with natural stone, joints are formed by simply butting two worktops together. The long bevelled front edge of one worktop is abutted by the short bevelled edge of another. The resulting joint is a neat v-groove. The joint is sealed against moisture penetration using BBComplete colour matched adhesive and sealant. (see picture opposite)

How to joint M-Stone

Ensure any joining edges have a bevel formed on the top and bottom faces. Any saw cut edges will not need any additional finishing. Follow the process at "reproduce the bevelled edge" on page 8

Ensure both mating faces are thoroughly cleaned using white spirit and allowed to dry. Apply a 3mm diameter bead of colour match BBComplete to the centre of the mating edge of the final worktop. Draw the worktops together and ensure a good squeeze out of adhesive, if possible use suction lifters to pull the worktops together. If necessary apply a fine bead of BBComplete to the resulting v-groove at the top face. Using a soft scraper, remove excess BBComplete and wipe off any final smears using a minimal amount of white spirit on a clean cloth. Allow to cure for 24hrs. Finally recheck joint allignment: once BBComplete cures levels can be difficult to realign.

Diagonal corner solutions: joints can be cut by circular saw and can either be cut square or with a v-groove depending on your customer's taste. It is not always necessary to bisect the joint angle. In each instance follow the sealing process above.

For a neat fit, where a worktop abuts a tall housing, the edge need not be bevelled or finished along its full length; however a professional finish can be achieved by bevelling and polishing the portion of the edge protruding past the carcase.

Fixing in place

Prior to Joining/Fixing in place:

Perform a dry fit trial and check for any necessary shimming to produce level joints. M-stone has a thickness tolerance of 1mm and may on occasion need packing at joints. HPL edge strips are an ideal shimming material. Ensure that all carcases are level, rigidly screwed to the wall and adjustable legs are locked off and unable to move. M-stone is bonded to carcases using BBComplete adhesive and sealant. Please do not attempt to screw in place: mechanical fixings must not be used. Allow a 4mm expansion gap to the rear edge and at all ends finishing at a wall. At tall housings the edge may be allowed to contact the housing.

Fix at front: Apply two 5mm thick blobs of BBComplete of 15mm diameter to the front tie-rail of the carcase.

Carcases over 1000mm wide should have a batten screwed to the wall with a similar amount of BBComplete used to fix the worktop in place.

Position the worksurface in place and press down to seat, align and level.

Fix at back: Cut two timber blocks approximately 50x25x25mm per carcase. Apply two beads of BBComplete adhesive centrally to two adjacent 50mm faces. Working from the underside - position the timber blocks nearest to the wall and press in place linking the carcase side to the underside of the worktop.

Clean any excess BBComplete away promptly with a minimum amount of white spirit. Allow to cure for 24hrs before use.

Seal around the rear edge with BBComplete to prevent water spills from seeping behind the worktops and allow to cure for 24 hours before final application of Bushboard Professional Worktop Polish.

Tiling: always set tiles 5mm above the worksurface by tiling down onto a spacing strip. Back fill to the wall with either BBComplete or high modulus silicone.

Final polish and hand over

After allowing the BBComplete adhesives to cure fully for 24hrs, thoroughly clean the worksurface using warm soapy water followed by warm clean water and wipe dry.

Bushboard Professional Worktop Polish is ideal to maintain M-Stone worksurfaces. A consumer care kit is available seperately and includes Bushboard Professional Worktop Polish.

splashbacks and upstands

Cutting to size: bevelling and refinishing cut edges

Cut splashbacks and upstands to size using a circular saw following the same process described for worktops. The cut edges are re-bevelled and finished following the same process as used for worktops. Take extra care with the thinner 12mm material; it is more likely to crack if mishandled.

In all instances carefully follow the diagram on page 9 and work on a correctly trestled base board ensuring the work piece and waste is fully supported above the base board on 40+mm tall planed timber bearers or blocks. Support the waste section on similar blocks to ensure it remains supported and cannot fall away. Ensure that blades do not contact the base board.

Cutting apertures for sockets and switches

To cut apertures a jigsaw fitted with the diamond blade supplied in the standard installation kit is the ideal tool. Dust extraction is vital and should be controlled using a vacuum extractor manually.

Mark out the cut-out final size in pencil. Temporarily place a timber block under the marked area prior to drilling to prevent break out on the rear face. Using the diamond drill bit from the standard installation kit drill 8mm holes within the marked out line at each of the corners.

Set the pendulum setting on the jigsaw to '0' and the stroke rate to 1800spm. The key to jigsaw cutting M-Stone is patience: do not push the machine too hard, give the blade time to cut. Forcing the blade and pace will lead to blade defection and an out of square cut.

To avoid the base plate damaging the face surface, always use the plastic surface protective shoe that comes with the machine or apply 50mm masking tape strips.

Joints in corners and between components

M-Stone splashbacks and upstands are designed to butt joint at corners. Mitres are difficult to achieve and should be avoided.

Both splashbacks and upstands are the same 12mm thickness. Running an upstand away from the side of a splashback is an elegant way to link a hob or sink splashback area to the rest of the layout. A v-groove similar to that used on worktop joints is the most aesthetically pleasing solution. Follow the worktop jointing and bevelling advice to complete this solution.

Final installation

Ensure that wall surfaces are reasonably flat, stable, dry and dust free. Prior to installation thoroughly clean the back of the splashback or upstand using water and allow to dry.

Splashbacks and upstands are bonded to the wall and seamed around the edges using colour matched BBComplete adhesive and sealant. For larger installations a more cost effective neutral BBComplete panel adhesive is available from your supplier.

Upstands: Apply three beads of BBComplete adhesive to the back of the upstand; one at 15mm in from each long edge and one centrally. Apply a bead of colour matched BBComplete directly onto the worktop 5mm in from the wall. Place the upstand in position firmly pressing it into place.

Splashbacks: being a larger surface area it's best to apply blobs as opposed to beads.

Apply blobs of BBComplete adhesive 30mm in diameter and 15mm deep to the back of splashback. The blobs should be spaced 125mm apart, 50mm from the edge. Apply a bead of BBComplete directly onto the worktop 5mm in from the wall. Place the splashback in position firmly pressing it into place.

Where two components come together at a v-groove joint use the BBComplete sealing advice as laid out for v-grooved worktop joints.

Carefully remove any excess BBComplete using a soft scraper. Clean off any smears using a clean wipe moistened with a minimum of white spirit. Allow to cure for 24hrs before use.

Ivory Stone worksurface with upstand and splashback.

Rear cover overleaf:
Almond Stone worksurface.

For technical support on Bushboard products,
please contact the Customer Service Team on:
tel: 01933 232 272
fax: 01933 232 286
email: help@bushboard.co.uk

or log onto www.bushboard.co.uk

BUSHBOARD

478079 REV3 JULY 2013